CHRIST CHURCH
ABINGDON

Safeguarding

Vulnerable Adults

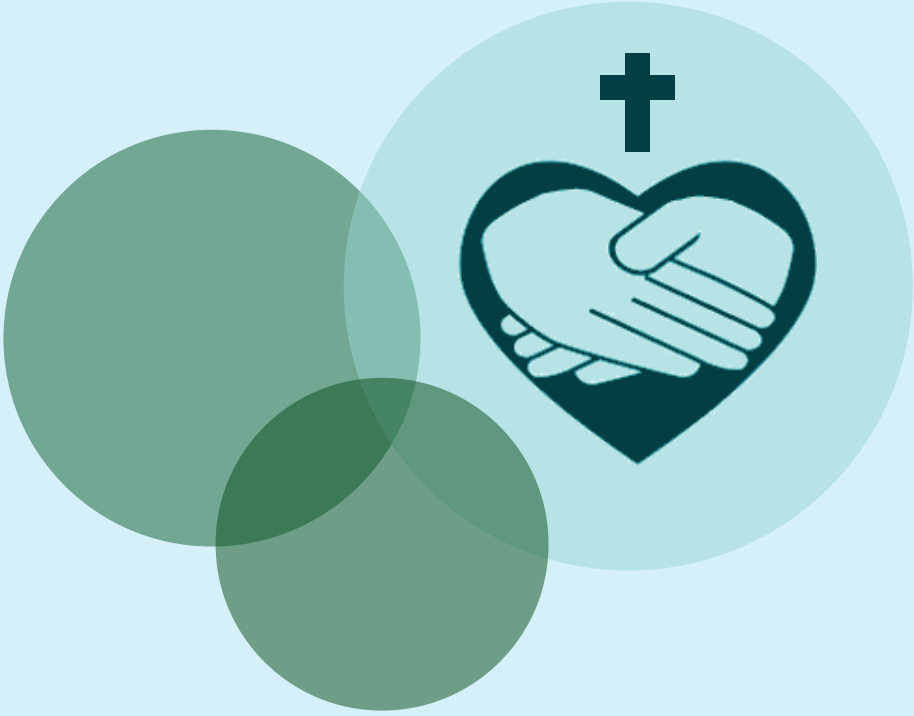

Guidelines for Working with Vulnerable Adults
at Christ Church, Abingdon,
Northcourt Road and Long Furlong

(version 2d, Jul 2025)

(Replacing Version 2, July 2019)

VA

Safeguarding at Christ Church

Thank you for volunteering to be involved in the Pastoral care of vulnerable adults at Christ Church, Abingdon.

The term "vulnerable adult" refers to a person aged 18 or over whose ability to protect himself or herself from violence, abuse, neglect or exploitation is significantly impaired through physical or mental disability, illness, old age, emotional fragility, distress, or otherwise; and for that purpose, the reference to being impaired is to being temporarily or indefinitely impaired. Please note that some adults may not consider themselves vulnerable but may be vulnerable to being abused by individuals in positions of leadership and responsibility. See page 13 for more details.

You will be working with a team of people and will have a team leader. Your team leader is there to support you. You can also get support and advice from the Pastoral Coordinator and the CCA Safeguarding Team. All their contact details are towards the back of this booklet.

If you are 18 or over you will be expected to attend mandatory Safeguarding Training every 3 years where you can find out more about safeguarding and discuss practical scenarios with other team members.

The CCA Safeguarding Guidelines are 'owned' by clergy, members of the PCC and all those working on behalf of CCA with vulnerable adults. The PCC have appointed a Parish Safeguarding Officer, who together with the Safeguarding Team have approved these Guidelines and oversee compliance and implementation.

Whistleblowing: Safeguarding involves the whole of church life. If you have any concerns about anything don't keep quiet. Talk to someone in leadership.

Christ Church, as part of the Church of England, make the following commitments:

The welfare of the vulnerable adult is at all times paramount and takes precedence over all other considerations.

The Diocesan Safeguarding Team must be consulted whenever a safeguarding concern of any kind arises in our parish.

Safeguarding is part of our core faith and an integral feature of Christian life in our parish churches.

The full Diocesan Safeguarding Guidelines and 2018 Parish Safeguarding Handbook are available from the Diocesan website or from the CCA Safeguarding Team.

Contents

This booklet contains 2 main sections:

1. Working Safely pg 3-8
2. Abuse and Disclosure pg 9-13

Plus Appendices:

- Useful Helpline Numbers pg 15
- Sample Disclosure Reporting Form pg 16
- Vulnerable Adults Further Definition pg 17
- Safety pg 18
- Site Maps pg 19
- Contacts pg 21

1. Working Safely

Team working is an important part of working with vulnerable adults. It is important for all volunteers and paid staff to meet together regularly in their groups to review their work and pray about the people in their care. All groups will have a leader or coordinator.

- We are committed to respectful pastoral ministry to all adults within our church community.
- We are committed, within our church community, to the safeguarding and protection of vulnerable people.
- We will carefully select and train all those with any pastoral responsibility within the Church, including the use of Disclosure and Barring Service (DBS) disclosures where legal or appropriate.
- We will respond without delay to any complaint made that an adult for whom we were responsible has been harmed, cooperating with police, the Diocesan Safeguarding Team and the local authority in any investigation.
- We will seek to offer informed pastoral care to anyone who has suffered abuse, developing with them an appropriate healing ministry.
- We will challenge any abuse of power by anyone in a position of trust.
- We will care for and supervise any member of our church community known to have offended against a vulnerable person.

Integrity

Exercising any kind of ministry involves workers developing an understanding of themselves and how they relate to others, how they increase the well-being of others and how they ensure their own wellbeing and safety.

People in positions of trust have power, although this may not be apparent to them, therefore respecting professional boundaries is particularly important. Many pastoral relationships can become intertwined with friendships and social contacts, making this guidance even more necessary.

Behaviour

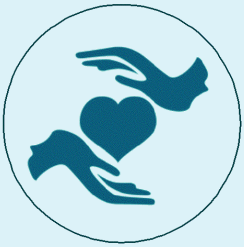

- Church workers should treat those with whom they minister or visit with respect, encouraging self-determination, independence and choice where appropriate.
- Church workers should not undertake any pastoral ministry while they are under the influence of drink or non-prescribed drugs.

Training and referral

- Church workers who exercise a healing ministry should be trained in the theology and nonintrusive practice of that work., however, all church members are encouraged to pray simply for and with those they are alongside, as appropriate. See also ‘acceptable touch’ page 6.
- Church workers should recognize their limits and not undertake any ministry that is beyond their competence or role (e.g. therapeutic counselling, deliverance ministry, counselling victims of abuse and domestic violence, or their perpetrators, or giving legal advice). In such instances the person should be referred to another person or agency with appropriate expertise.

Relationships

Church workers should exercise particular care when ministering to persons with whom they have a close personal friendship or family relationship.

- Church workers should be aware of the dangers of dependency in pastoral and professional relationships and seek advice or supervision when these concerns arise.
- Pastoral relationships may develop into romantic attachments and such situations should be handled sensitively. Workers need to recognise such a development and make it clear to both the person concerned and a supervisor or colleague. Alternative arrangements should be made for the ongoing pastoral care of the person concerned.
- Church workers should avoid behaviour that could give the impression of inappropriate favouritism or the encouragement of inappropriate special relationships.

Good Practice

Set clear expectations

- Be clear about what support you can offer and the purpose and limitations of any pastoral care/support that is available.
- Do not accept any gifts from adults other than token items, to avoid misunderstandings or subsequent accusations from the person or their family.

Referrals

- Referrals to any agency that could provide help should only be made with the adult's permission, and ideally encourage them to set up the contact. The exception is where there are safeguarding concerns.

Acceptable Touch

Sympathetic attention, humour, encouragement and appropriate physical contact are needed by everyone.

The following guidelines regarding touching are suggested:

- Always ask permission
- Be mindful of your body position
- Avoid any physical contact that is or could be construed as sexual and/or abusive/offensive

As a team take responsibility for monitoring one another in the area of physical contact. Challenge one another if necessary.

Home Visits

Visiting vulnerable adults in their homes is an essential element of many church workers' roles.
However, unexpected circumstances can be encountered, some of which may place a church worker at risk.
To assure the person you are visiting of their safety, and for your own as a church worker:

Reduce Risk

- Before an initial visit, especially if you do not know the person, consider any concerns or risks that might be present. In complex situations consider a formal risk assessment.
- Visiting in pairs may be advisable, especially if the adult is perceived to

be vulnerable.

- Do not call unannounced; call by appointment, if appropriate telephoning the person just before visiting.
- Carry a phone if possible and tell someone where you will be.
- Never offer “over the counter” remedies to people on visits or administer prescribed medicines, even if asked to do so.
- Avoid handling money or doing shopping on a regular basis unless agreed with your team leader.
- If someone wants to make a donation to the church, put it in an envelope, mark it on the outside as a donation and obtain a receipt from the Treasurer.

Make Records

- Make a note of the date when you visit people, and agree with your team leader how often these are handed in to the church office for safekeeping
- Discuss safeguarding concerns with your team leader or follow the guidance in these guidelines.
- See page 11 for making records where abuse is suspected.

Concerns about possible abuse or inappropriate behaviour should always be reported.

Responsibility

If you are concerned or suspect abuse speak up!

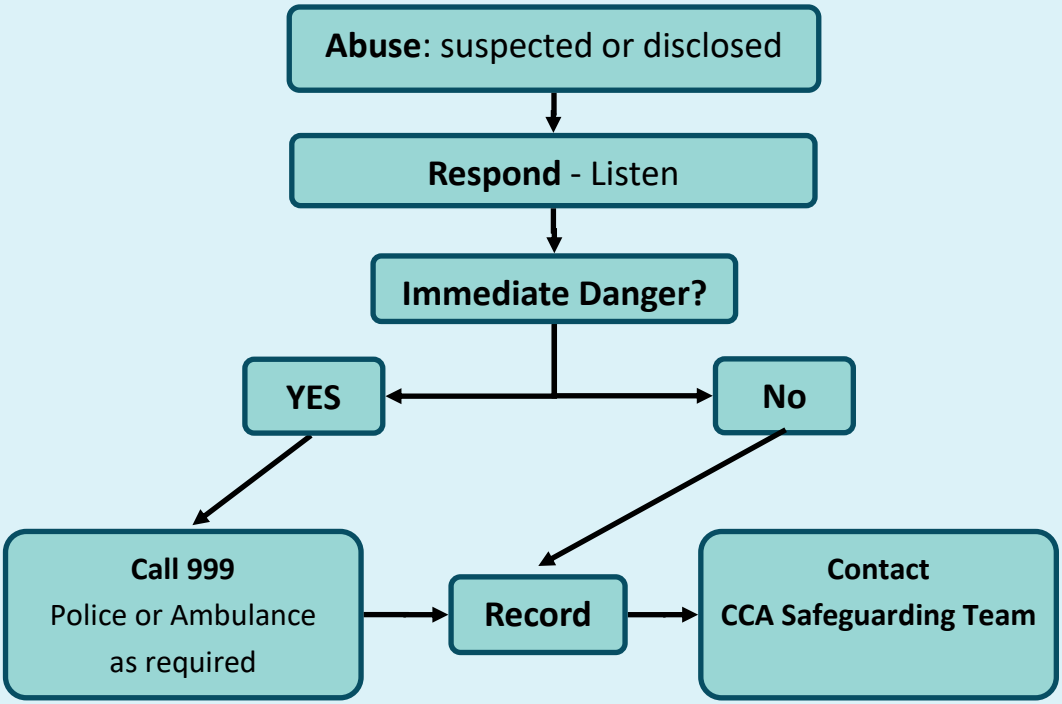

Contact CCA Safeguarding Team if a child is involved

At any point you can get support and advice from the Pastoral Coordinator, Older Person's Ministry Leader or Clergy, if the disclosure doesn't involve them.

2. Abuse and Disclosure

Who Abuses Adults?
Potentially anyone, adult or child, can be the abuser of an adult. Abuse will sometimes be deliberate, but it may also be an unintended consequence of ignorance or lack of awareness. Alternatively, it may arise from frustration or lack of support.
The list can include:

- Relatives of the vulnerable person
- Neighbours
- Paid carers
- Workers in places of worship
- People who are themselves vulnerable and/or are users of a care service
- Confidence tricksters who prey on people in their own homes or elsewhere
- Institutions

What is Abuse?
The UK Government document "Care and Support Statutory guidance" categorises and defines adult abuse in terms of:

- Physical abuse
- Sexual abuse, Female Genital Mutilation
- Psychological /emotional abuse
- Financial or material abuse
- Neglect or acts of omission, Self-neglect
- Discriminatory abuse
- Domestic abuse
- Organisational/institutional abuse
- Modern Slavery (inc. Cuckooing), trafficking, sexual exploitation
- Spiritual abuse
- Extremism and Radicalisation

If abuse is disclosed or you suspect abuse...

Respond

Do:

- Remain calm.
- Listen and take what is said seriously.
- Offer reassurance that disclosing is the right thing to do.
- Use open questions but without investigating (open questions begin with words like: who, what, when, where and how.
- Take into account the individual's level of understanding.
- Establish only as much information as is needed to be able to tell the appropriate people (see Page 8 and contacts list) what is believed to have happened, when and where.
- Check whether they mind you taking notes while they talk so you can make sure you capture the information accurately. At the end confirm with them that you have understood everything correctly.
- Ask what the individual hopes will result from the disclosure.
- Discuss what will happen next and consider any ongoing support needs.
- Ask if their identity and the identity of the respondent (alleged abuser) can be shared with key church officers and statutory agencies. However, you have a duty to refer (even without their consent) if there is any current risk to children or other adults. See Page 13 for issues around consent.

Do Not:

- Make promises that cannot be kept (e.g. that you won't share the information).
- Make assumptions or offer alternative explanations.
- Investigate.
- Put words in their mouth
- Share the concern or allegation with anyone other than those who need to know (e.g. the statutory agencies, Safeguarding Team, Staff members), especially not the alleged abuser.

Record

- Make some very brief notes at the time.
- Make a written record as soon as possible afterwards or before the end of the day using a 'Safeguarding Concern Form' if possible. See Page 16
- Record:
  - the time, date, location, persons present and how the concern or allegation was received, e.g. by telephone, face to face conversation, letter, etc..
  - the actual words used, including any swear words or slang. facts and observable things, not your interpretations or assumptions.
- Don't speculate or jump to conclusions.
- Sign and date the record. Pass a copy to the CCA Safeguarding Team, who will pass a copy to the Diocesan Safeguarding Team (DST) if appropriate.
- If you are referring to Social Care without the individual's consent (see page 13) discuss the issue with the CCA Safeguarding Team if you are uncertain, except in emergencies., and also note this in your record.
- Records should be kept secure and confidential.
- Do not destroy your original notes in case they are required by the DSA or the statutory authorities.

Sample reporting form in Appendix

Report

A reporting flowchart can be found in Section 1 of this booklet 'Working Safely'. Contact Details are on the back page
If you are under 18 do not do this alone. Always seek support.
Report concerns to the CCA Safeguarding Team within 24 hours, especially if children are also involved.

EMERGENCY:

- If you believe an adult is in immediate danger of significant or serious harm, contact the emergency services on 999
- Contact a member of the CCA Safeguarding Team soon after, along with the Diocesan Safeguarding Team (DST).

NON-EMERGENCY:

- Contact a member of the CCA Safeguarding Team or Clergy (unless it involves them).
- Contact the Diocesan Safeguarding Team (DST) if you can't reach the CCA Safeguarding Team and especially if a concern is about a member of staff or volunteer working with vulnerable adults
- Follow their advice about informing Social Services

If in doubt don't delay, seek advice from statutory agencies.

If the concern arises during an activity, discuss with the group/activity leader, who will help you to contact the CCA Safeguarding Team or incumbent.

Continued overleaf

See Appendix for contact numbers

Report (cont...)

Do not contact the respondent (alleged abuser) or anyone who may be implicated in the allegation or disclosure, even if they would normally be contacted as part of the procedure.

Help and support is available from the CCA Safeguarding Team, the Pastoral Coordinator, Older Person's Ministry Leader and Clergy at any time.

Do you have consent to share?

Consent should be sought if possible before sharing personal information but relevant personal data can be shared lawfully without consent if it is to keep a child or vulnerable adult safe from neglect or physical, emotional or mental harm, or if it is protecting their physical, mental or emotional well-being.

Never make these decisions on your own. If you are going to share personal data, contact a member of the Safeguarding Team, who will help and advise you. You can have a no-names consultation and get advice if you're not sure.

Ultimately, the most important consideration is whether the sharing of information is likely to support the safeguarding of a child, young person or vulnerable adult.

Non-Recent Abuse

Safeguarding concerns may be about something going on now or something that happened in the past (non-recent). Non-recent allegations of abuse must be treated as seriously as recent allegations. Research evidences that it may take up to 25 years or longer for an adult to disclose sexual abuse that happened to him/her either as a child or younger adult. A victim/survivor needs to be aware that if a respondent is known to be currently working with children/vulnerable adults in either a paid or voluntary capacity a referral to the statutory services will be made. The DST will make this referral.

Useful Helpline Numbers

Action on Elder Abuse helpline - 0808 808 8141

24-hour National Domestic Violence helpline - 0808 2000 247

NAPAC offer support and advice to adult survivors of childhood abuse - 0808 8010 331

Cruse bereavement helpline - 0808 808 1677

Family Lives support and advice on family issues - 0808 800 2222

MACSAS for people who have been abused by church officers - 0808 801 0340

Samaritans for people struggling to cope and needing someone to talk to - 116 123

The Silver Line - helpline and friendship service for people aged 55 and over - 0800 4708090

CONFIDENTIAL

Christ Church
Abingdon

Safeguarding Concern Form for the attention of the **Christ Church Abingdon Parish Safeguarding Team**

You can use this form if you are concerned about someone, suspect abuse or someone has disclosed abuse to you. Of you can phone the Parish Safeguarding Team. Please give the form to the Safeguarding Team who can then notify the Diocese if necessary.
If abuse was disclosed use the victim's actual words (including exact language) rather than your own words. Thank you for taking the time to do this.
If you believe someone to be in danger now please phone 999 immediately

About you

Your name:	
Your address:	
Your contact number:	

Who are you concerned about?

Child/Young person/Adult's name:	
Approx age, Date of Birth & contact details (if known)	

About the alleged abuser

Their name (and approx. age if <18)	
Contact details (if known)	
Their role in church (if they have one)	

If this is connected with a church activity

Group/Activity:	
Date and time:	
Venue:	
Your role in the group/activity:	
Other adults around:	

Who else have you contacted? *Fill in date and time of those you have contacted about this incident*

Name/Role	Date and Time

What are you concerned about?

Describe what was said and what you observed. Use overleaf and extra paper if needed.

SAMPLE

Christ Church, Northcourt Road, Abingdon, OX14 1PL safeguarding@cca.uk.net

Form downloadable from: cca.uk.net/safeguarding-and-policies/

Vulnerable Adults Definition

The Care Act 2014 defines a "vulnerable adult" as someone aged 18 or over who has needs for care and support (whether or not the authority is meeting those needs), and is experiencing, or is at risk of, abuse or neglect, and as a result of those needs is unable to protect himself or herself against the abuse or neglect or the risk of it.

The church also extends the term to include those not in need of local authority care but who we recognise still have an impaired ability to protect themselves from violence, abuse, neglect or exploitation whether temporarily or indefinitely. Note that some adults may not consider themselves vulnerable but may be vulnerable to being abused by individuals in positions of leadership and responsibility.

Some factors that increase vulnerability include:

- mental illness, chronic or acute
- sensory or physical disability or impairment
- learning disability
- physical illness
- addiction to alcohol or drugs
- dementia or failing faculties of old age
- homelessness
- refugee families or individuals (including those seeking asylum)
- victims/survivors of domestic abuse – direct violence and/or significant emotional coercion
- Those who have suffered historic abuse in childhood
- A permanent or temporary reduction in physical, mental or emotional capacity brought about by life events – for example bereavement, abuse or trauma

- These factors may not exist in isolation; for example, someone with a drink problem masking underlying dementia; or a frail housebound elderly person with underlying depression.

As adults are not inherently vulnerable and in need of protection it is important to recognise that the factors described above do not, of themselves, mean that a person is vulnerable. It is a combination of these factors and the circumstances that a person finds him/herself in that can make an individual vulnerable to abuse or neglect.

Safety

Potential Dangers

- Leaders should be familiar with the Building Premises Guidelines concerning safe use and security of the buildings and the site-specific or event-specific risk assessments
- Leaders need to be aware of potential dangers (e.g. poor storage, loose carpets) and take appropriate action.
- Faulty equipment should be taken out of use, labelled as faulty and reported to the office.
- Accidents, incidents or near misses should be reported using CCA accident report forms.
- Leaders should make themselves aware of fire exits, fire equipment and fire exiting procedures.

First Aid

- Leaders should know where First Aid kits are.
- If possible first aid should only be administered by approved first aiders and in a visible place.
- A record of first aid administrations should be kept using the CCA accident report forms

Site Maps

Northcourt Road

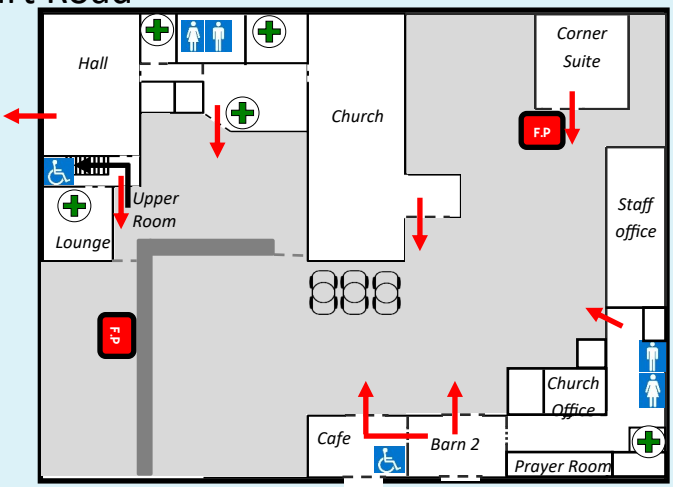

Long Furlong

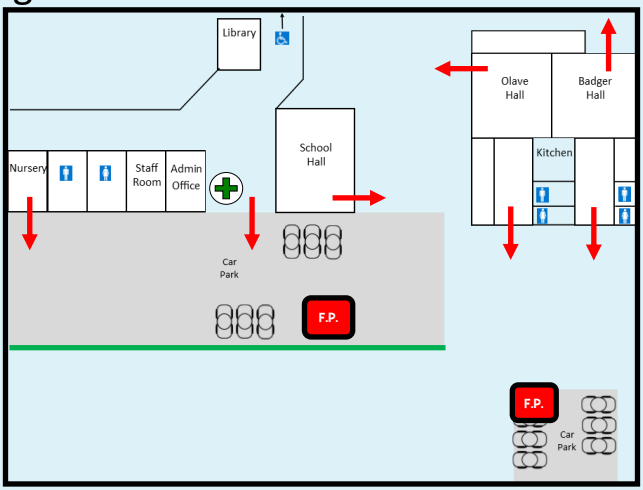

Key:

First Aid Kit

Fire Assembly Point

Fire Exit Route

CONTACTS

Christ Church *(for advice and support for yourself)*

CCA Safeguarding Team:

- Roland Knight (01235) 412944, 07969 808776 or safeguarding@cca.uk.net
- Val Challis 07751 082258
- Sheila Furlong 079040879409
- Karen Brombley
- Sarah Smith

Older Person's Ministry Leader:

- Sue Quantick sue.quantick@cca.uk.net

Oxford Diocese *(for advice and support for yourself)*

- **Email**: safeguardingreferrals@oxford.anglican.org or safeguarding@oxford.anglican.org for non-urgent matters
- **Phone:**
  - In Office Hours
    - Diocesan Safeguarding Team 01865 208295
  - Out of office hours
    - Thirtyone:eight 0303 003 1111

Other *(for advice about disclosure or to refer)*

Oxfordshire Adult Safeguarding Board 0345 050 7666
Out of hours 0800 833 408
https://service.oxfordshire.gov.uk/raiseconcernforadult
Thames Valley Police (non urgent): 101

www.cca.uk.net/safeguarding-and-policies
www.oxford.anglican.org/safeguarding

Remember - you are trying to protect the vulnerable adult from further harm. You will be supported throughout by your group coordinator/leader.